Wall-Fol

folding tables and benches

with space-saving wall storage pockets... in-the-wall or on-the-wall

The **NEW LOOK** *in wall-type folding table and bench sets offers many exclusive features:* **DETACHABLE** *tables and benches may be rolled anywhere.* **SELF-SUPPORTING** *and* **SELF-STANDING** *steel undercarriages boast new improvements to give outstanding* **STRENGTH** *and* **STABILITY.** *Attractively finished table and bench tops are available in a* **WIDE VARIETY** *of* **FORMICA** *patterns. Undercarriages are plated in* **DURABLE ZINC LUSTRON** *finish. Tables and benches can be* **EASILY** *and* **QUICKLY** *stored in new* **SIMPLIFIED** *wall pockets of 18-gauge* **ALL-WELDED STEEL** *construction.*

Rol-Fol

ROL-FOL TABLE INC.
Los Angeles 46, California

R.I.R. FILE No. 28N-4

Wall-Fol

FOLDING TABLES AND BENCHES

with space-saving wall storage pockets for multi-purpose rooms and social halls

When in use, Wall-Fol Tables can be locked in position to prevent accidental folding.

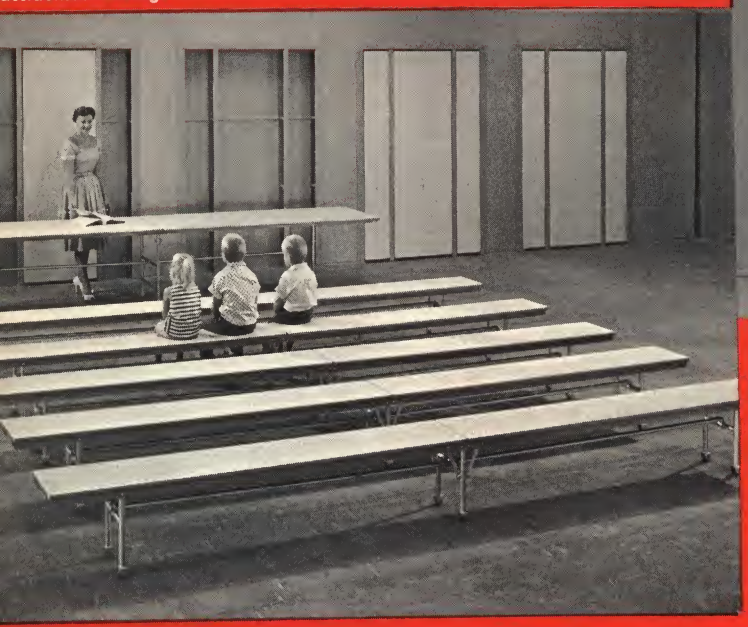

Wall-Fol Tables and Benches may be quickly detached from their pockets and rolled anywhere in the room. Benches may be used for assembly seating.

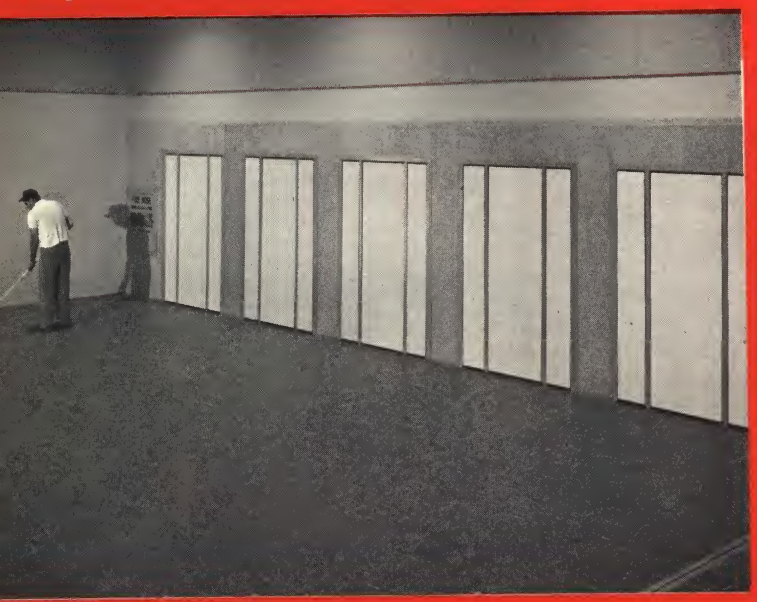

Out of sight and out of the way when not in use, Wall-Fol leaves the entire area clear for maximum usefulness and easiest maintenance.

Wall-Fol Tables and Benches fold and lock securely into their own attractive wall pockets. Easily operated by one man.

ATTRACTIVE APPEARANCE: Top surfaces of Wall-Fol Tables and Benches are finished with FORMICA in a wide variety of colors and patterns. Since tables and benches become part of the wall when folded in the pockets, Wall-Fol equipment is pleasing to the eye when stored or in use.

RUGGED CONSTRUCTION: Table and bench top panels are securely attached to the sturdy self-supporting and self-standing steel undercarriage . . . won't come loose! Steel legs and hardware are zinc lustron plated to offer a long wearing protective finish.

COMPACT: Single depth steel wall pockets are only 5½″ deep . . . require minimum space when built-in-the-wall or on-the-wall . . . eliminate the need for extra storage room space.

TIME-SAVING: Fast, easy setup and storage of tables and benches save time and labor . . . make multi-use of rooms truly practical.

LARGE CAPACITY: Strong, durable Wall-Fol Tables and Benches are 14 feet long, seating 20 or more children per set; tables alone for use with folding chairs will comfortably accommodate 16 adults. Tables and benches are available in a choice of 6 heights.

FLEXIBLE: Wall-Fol Tables and Benches may be quickly and easily detached from their pockets and rolled to any desired arrangement. In a few minutes' time, tables can be placed for social functions and banquets.

STANDARD POCKETS: Wide variety of pocket models offers the utmost in installation flexibility for mounting in-the-wall or on-the-wall, with and without bench pockets. Multiple-depth pockets are available to store two, three or four sets, a further saving on storage requirements. Dimensional details on triple and quadruple depth pockets supplied on request.

MODELS AND DIMENSIONS

All models include pockets

Recommended spacing of pockets

for table pockets: 7′6″ center to center (minimum)

for table and bench pockets: 6′6″ center to center (minimum)

IN-THE-WALL . . . for new construction
Pockets with flanged edges to overlap finished wall

ON-THE-WALL . . . primarily for remodeling
Enclosed mullion pocket sides and head

ONE TABLE

MODEL F-1T Make rough opening 33¼″ x85⅝″x6″

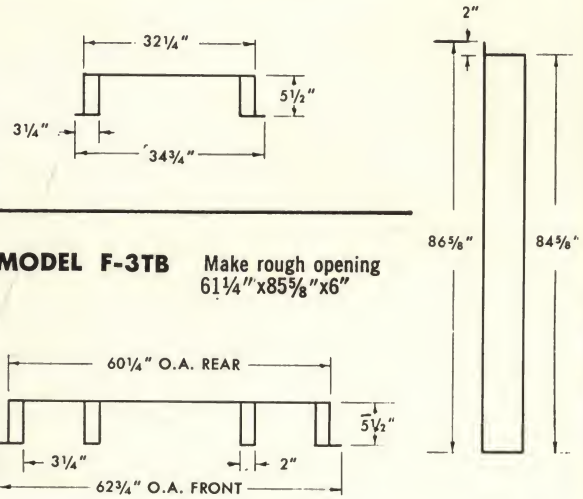

MODEL M-1T

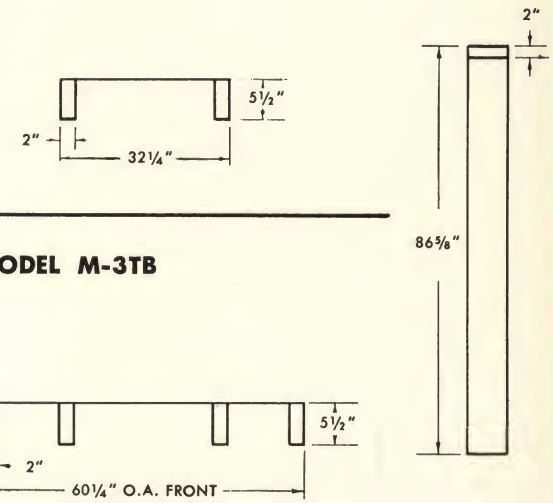

ONE TABLE AND TWO BENCHES

MODEL F-3TB Make rough opening 61¼″x85⅝″x6″

MODEL M-3TB

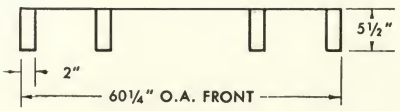

TWO TABLES

MODEL F-2T Make rough opening 33¼″x85⅝″x 11½″

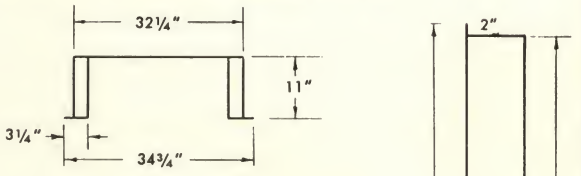

MODEL M-2T

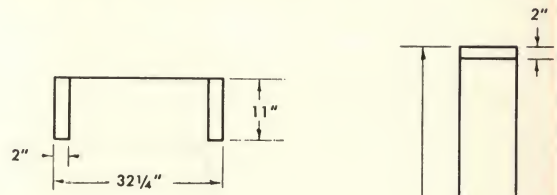

TWO TABLES AND FOUR BENCHES

MODEL F-6TB Make rough opening 61¼″ x85⅝″x11½″

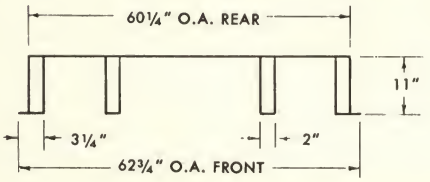

MODEL M-6TB

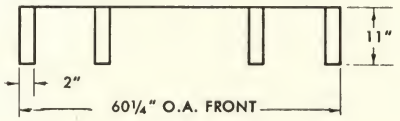

DO NOT SCALE THESE DRAWINGS

TWO METHODS OF INSTALLATION

IN-THE-WALL pockets are installed in wall recesses or built into the wall during construction.

ON-THE-WALL pockets for installation in existing rooms, may be attached directly to the wall surface.

DOUBLE-DEPTH pockets are used where wall space is limited. Two table and bench sets are stored in each pocket. The front set is unlocked from the pocket and rolled to a desired location. The second set is unfolded and left attached to the pocket or removed.

Wall-Fol SPECIFICATIONS

FOLDING TABLE AND BENCH SETS: Furnish two-leaf folding tables and benches 14 feet long complete with steel pockets, IN-THE-WALL (or ON-THE-WALL) WALL-FOL Model No. (to be selected) as manufactured by ROL-FOL TABLE, INC., 8467 Melrose Place, Los Angeles 46, California. Phone OLive 3-2428.

TABLES AND BENCHES: Tables shall be 14′ long x 28″ wide; benches 14′ long x 11¾″ wide, constructed as follows: The table and bench undercarriage shall be of all-steel construction. Top frames shall consist of 16 gauge cold rolled steel U channel 1⅞″ wide by 1-9/16″ deep. Legs and bracing shall be electro-weld, high carbon steel tubing 1″ O.D. x 15 gauge wall thickness. The entire undercarriage shall be one complete unit, self-supporting and self-standing, to which the top shall be securely fastened.

Hardware shall be precision die formed of ⅛″ steel. All casters shall be fixed, non-marking, rubber tired.

Each table and bench shall be provided with two manually operated locks and a safety catch lock. Manually operated clamp-locks shall be installed on the center legs of all tables for preventing accidental folding.

The tops of tables and benches shall be constructed of ¾″ particle board surfaced with a high pressure laminated plastic and plastic backer sheet. The plastic color and pattern shall be chosen by the purchaser from a selected group of FORMICA samples submitted by Rol-Fol Table, Inc. (Non-standard patterns and FORMICA in solid colors available at premium price.)

Edges of tables and benches shall be trimmed with a dent resistant plastic moulding, silver gray color. The moulding shall be applied to make a tight fitting joint with the plastic top surfaces.

The tubular steel undercarriage and all hardware parts shall be zinc lustron plated. Steel top frames shall be baked enamel, gray Hammertone finish.

TABLE AND BENCH HEIGHTS

To be selected by purchaser.

Standard table heights:
25″, 26″, 27″, 28″, 29″, 30″.

Standard bench heights:
15″, 16″, 17″, 18″, 19″ and 20″.

Note: 19″ and 20″ high benches are not recommended for schools.

DETACHABLE AND INTERCHANGEABLE: The extended tables and benches shall be instantly and individually detachable from the pocket so they can be rolled about for various groupings. Any height table or bench shall operate in any pocket.

STEEL POCKETS: Wall pockets to house tables and benches shall be all-welded construction of 18 gauge steel. Vertical members to be open steel columns. Pockets shall be enclosed at sides, head and back with steel panels. Pockets shall be factory prime painted. Finish painting after installation shall be done by purchaser.

When steel pockets are to be built into masonry wall (specify) three strap anchors shall be welded to jambs on each side of pocket by manufacturer. Angle iron lintels shall be furnished by others.

INSTALLATION: Contractor or purchaser shall provide wall recesses for in-the-wall models, install pockets and place tables and benches in pockets. The pockets are to be set plumb, true and level and anchored according to manufacturer's recommendations. Sales agent shall provide installation drawings and instructions.

NOTE: The manufacturer reserves the right to make material and design changes to further improve the product.

U. S. Patent Numbers 2,650,146 and 2,699,978

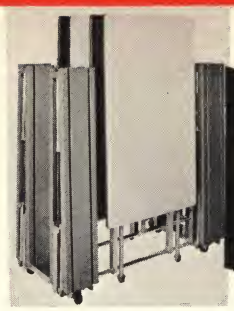

New Two-Fol folding table and bench sets

for multi-purpose rooms and cafeterias...

where space for wall pockets is not available

These attractive, skillfully designed and sturdily built sets will easily accommodate 24 to 30 children, yet can be stored in less space than conventional equipment.

EXTRA CAPACITY: Table and both benches are a full 16 feet long—two to four feet longer than other similar equipment—so that *three* TWO-FOL sets provide the same seating capacity as *four* conventional 12-foot sets.

SPACE-SAVING: TWO-FOL sets fold up and store in the same space required for equipment with *one-fourth less seating capacity!* Storage area is just 8 square feet (50″ x 23″) per set—the same as for a 12-foot set. Height folded, 63″.

TIME-SAVING: A further advantage of this new size is in saving of custodian time; TWO-FOL sets can be set up or folded and stored in three-fourths the time required by conventional sets... *a 25% saving!* TWO-FOL is easy to fold and store. Bench and table sections are folded separately. Large swivel casters permit the folded set to be quickly rolled with little effort.

STURDY CONSTRUCTION: The rugged self-supporting undercarriage is constructed of zinc-lustron plated steel tubing and channel. Table panels are surfaced with damage-resistant Formica. Baked enameled steel benches add to appearance and will withstand severe usage.

ATTRACTIVE APPEARANCE: Tabletops are available in a variety of colors and patterns; trimmed in silver-gray extruded plastic—a handsome and durable combination.

ADDED FEATURE: Benches may be left in folded position so that tables may be used for display purposes... or place chairs at tables for special occasions.

TWO HEIGHTS: Table 27″ high with 15″ benches
Table 29″ high with 17″ benches

DISTRIBUTED BY ROL-FOL SALES CO.
A division of Rol-Fol Table Inc.
8467 MELROSE PLACE
LOS ANGELES 46, CALIFORNIA
OLive 3-2428

Rol-Fol

Manufactured by ROL-FOL TABLE INC.
Los Angeles 46, Calif.
Factory, Van Nuys, California

FORM WF-11

Litho in U.S.A.

Digitized by:

ASSOCIATION
FOR
PRESERVATION
TECHNOLOGY,
INTERNATIONAL
www.apti.org

BUILDING
TECHNOLOGY
HERITAGE
LIBRARY

https://archive.org/details/buildingtechnologyheritagelibrary

From the collection of:

Carol J. Dyson, AIA